US009346630B2

(12) **United States Patent**
Nishizaka et al.

(10) **Patent No.: US 9,346,630 B2**
(45) **Date of Patent: May 24, 2016**

(54) **ROBOT SYSTEM, ROBOT APPARATUS, AND METHOD FOR PICKING WORKPIECE**

(71) Applicant: **KABUSHIKI KAISHA YASKAWA DENKI**, Kitakyushu-shi (JP)

(72) Inventors: **Yoshitaka Nishizaka**, Kitakyushu (JP); **Ken Nakamura**, Kitakyushu (JP); **Tomoki Kawano**, Kitakyushu (JP); **Yutaro Uchida**, Kitakyushu (JP)

(73) Assignee: **KABUSHIKI KAISHA YASKAWA DENKI**, Kitakyushu-Shi (JP)

(*) Notice: Subject to any disclaimer, the term of this patent is extended or adjusted under 35 U.S.C. 154(b) by 0 days.

(21) Appl. No.: **14/857,754**

(22) Filed: **Sep. 17, 2015**

(65) **Prior Publication Data**

US 2016/0083198 A1 Mar. 24, 2016

(30) **Foreign Application Priority Data**

Sep. 18, 2014 (JP) 2014-190444

(51) **Int. Cl.**

G06F 7/00	(2006.01)
G06F 19/00	(2011.01)
B65G 47/90	(2006.01)
B25J 9/16	(2006.01)
G05B 19/418	(2006.01)
B25J 9/00	(2006.01)
B65G 43/08	(2006.01)
B65G 47/52	(2006.01)

(52) **U.S. Cl.**

CPC ***B65G 47/905*** (2013.01); ***B25J 9/0093*** (2013.01); ***B25J 9/16*** (2013.01); ***B25J 9/1679*** (2013.01); ***B25J 9/1697*** (2013.01); ***B65G 43/08*** (2013.01); ***B65G 47/52*** (2013.01); ***G05B 19/4182*** (2013.01); ***G05B 19/41815*** (2013.01); *G05B 2219/39102* (2013.01); *Y10S 901/02* (2013.01)

(58) **Field of Classification Search**

None

See application file for complete search history.

(56) **References Cited**

U.S. PATENT DOCUMENTS

2002/0134710 A1* 9/2002 Nagler B07C 5/38 209/509

FOREIGN PATENT DOCUMENTS

JP 2002-316716 10/2002

* cited by examiner

Primary Examiner — Yolanda Cumbess

(74) *Attorney, Agent, or Firm* — Mori & Ward, LLP

(57) **ABSTRACT**

A robot system includes a first conveyor, a second conveyor, a robot, and a controller. The first conveyor conveys a plurality of kinds of workpieces. The second conveyor conveys workpiece groups each including a combination of the workpieces. The controller controls the robot, and includes a situation acquirer, a determiner, and an instructor. The situation acquirer acquires a situation in a predetermined monitor area on the first and second conveyors. The monitor area is set based on a movable range of the robot. Based on the situation, the determiner determines whether one of the workpieces on the first conveyor in the monitor area is a missing workpiece of one of the workpiece groups in the monitor area. The instructor instructs the robot to hold the one workpiece and to transfer the one workpiece from the first conveyor to the second conveyor.

20 Claims, 9 Drawing Sheets

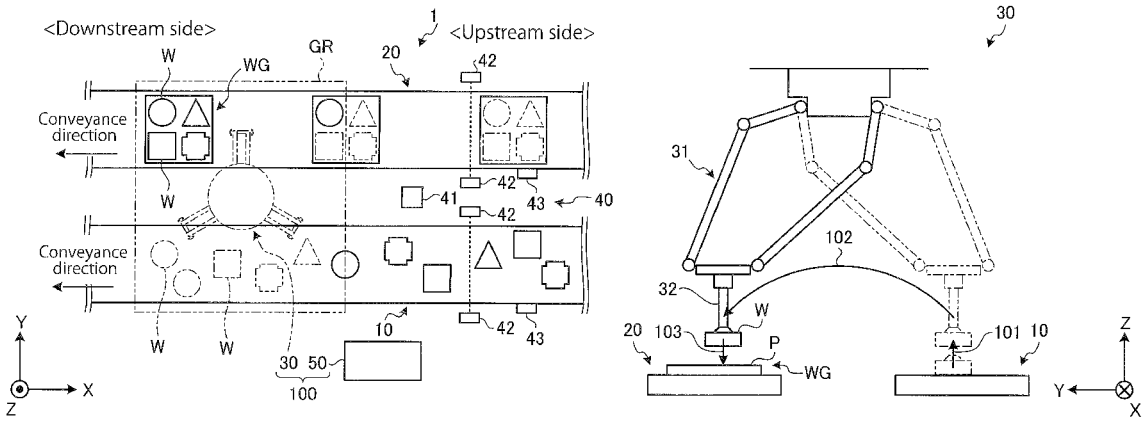

FIG. 1A

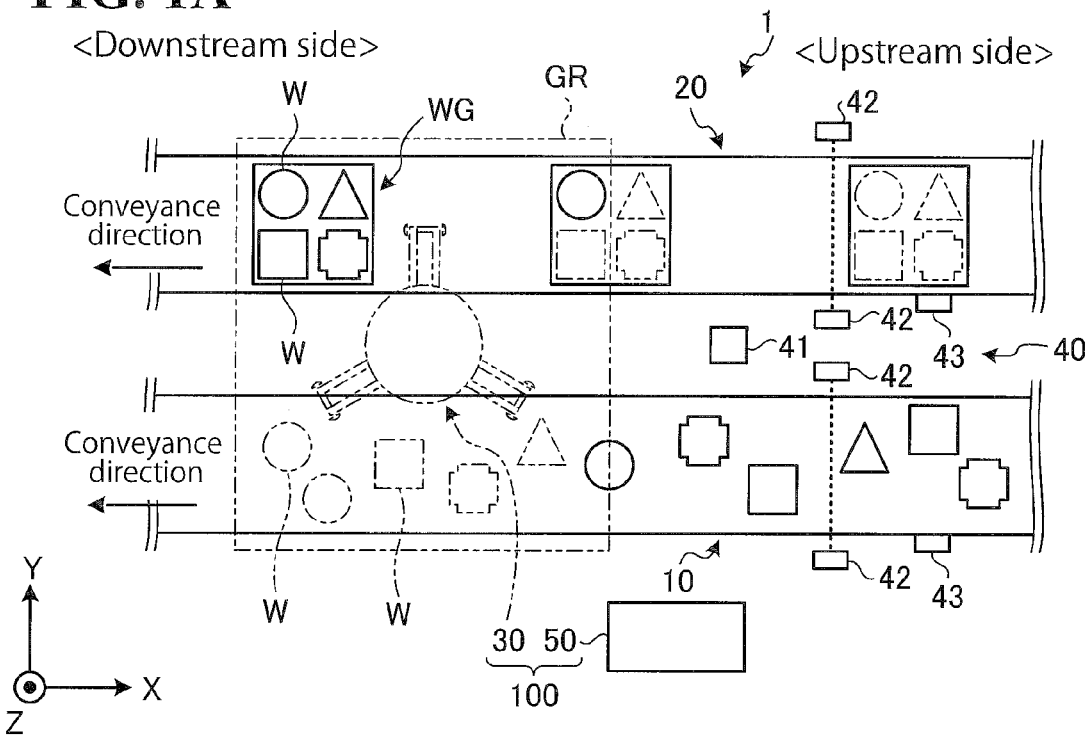
<Downstream side>
<Upstream side>
1
W
WG
GR
20
42
Conveyance direction
W
42
41
43
40
42
Conveyance direction
W
W
10
42
43
30
50
100
Y
X
Z

FIG. 1B

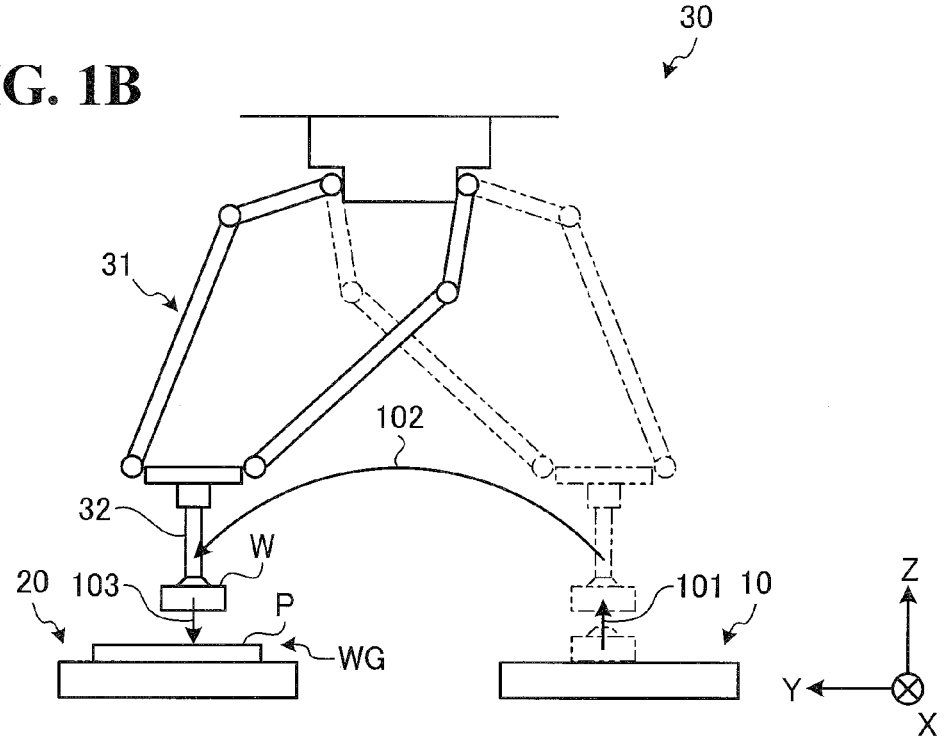
30
31
102
32
W
20
103
P
WG
101
10
Z
Y
X

FIG. 1C

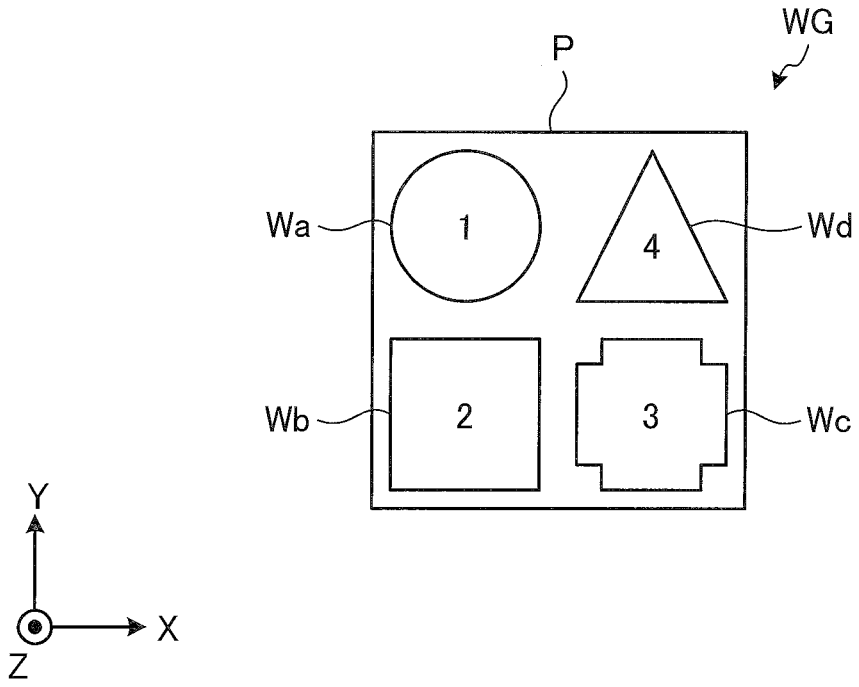

FIG. 2

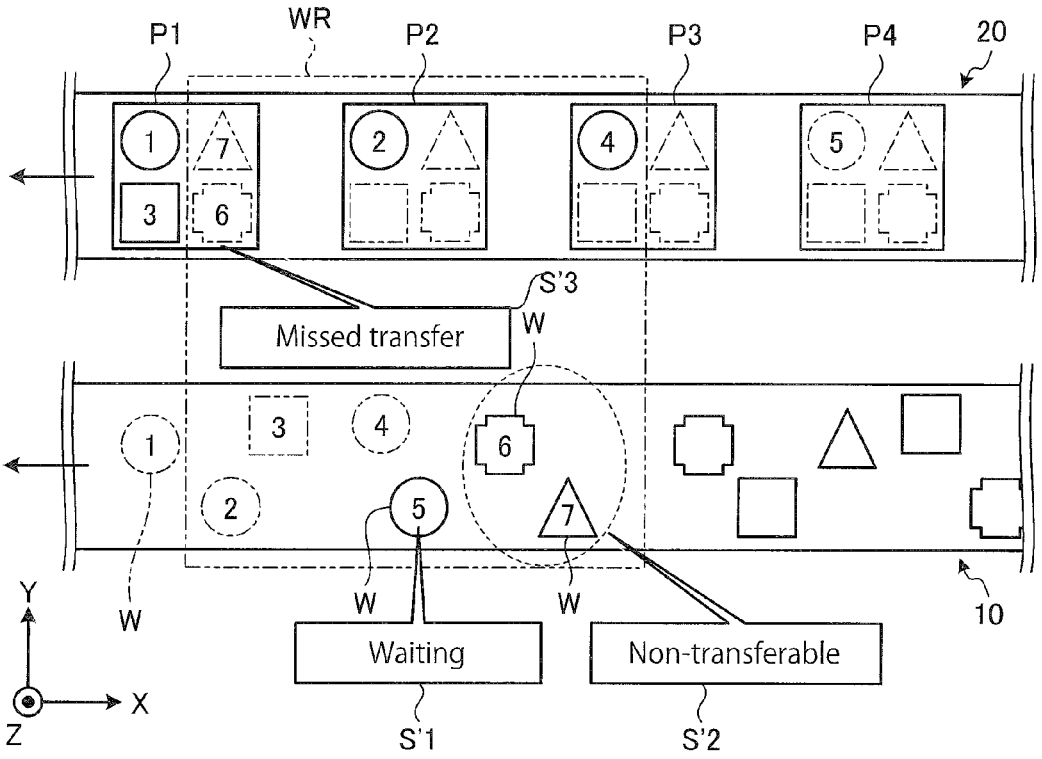
P1
WR
P2
P3
P4
20
1
7
2
4
5
3
6
S'3
Missed transfer
W
1
3
4
6
2
5
7
10
Y
W
W
W
X
Z
Waiting
Non-transferable
S'1
S'2

FIG. 3A

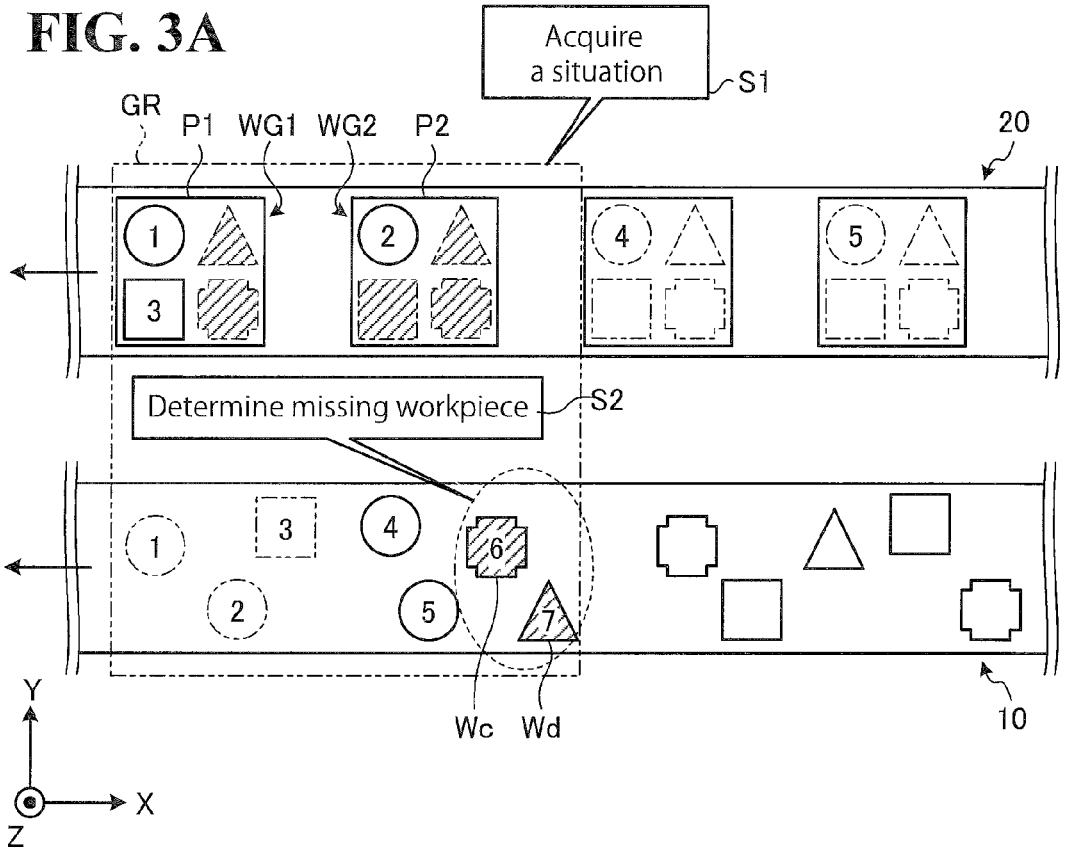

FIG. 3B

Transfer order	1	2	3	4	5	6	7	...
Workpiece	○	○	□	○	○	⯃	△	...
						Wc	Wd	

Transfer order	1	2	3	4	5	6	7	...
Workpiece	○	○	□	⯃	△	○	○	...
				Wc	Wd			

FIG. 3C

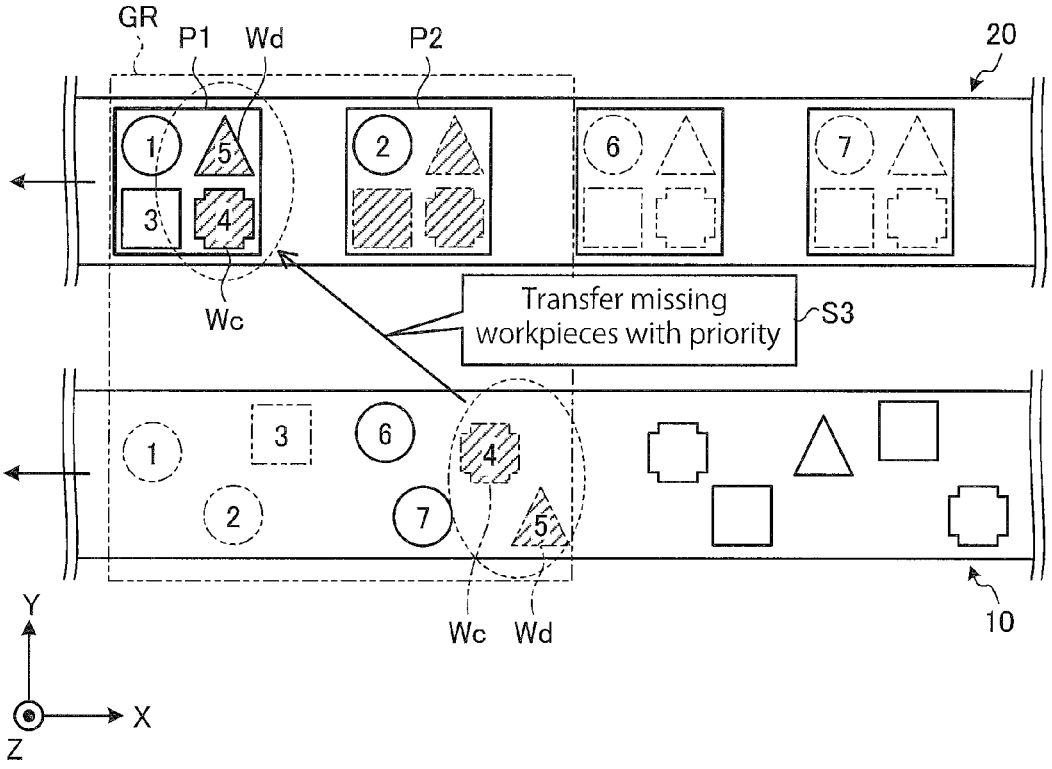
GR
P1
Wd
P2
20
1
5
2
6
7
3
4
Wc
Transfer missing workpieces with priority
S3
1
3
6
4
2
7
5
Wc
Wd
10
Y
X
Z

FIG. 4

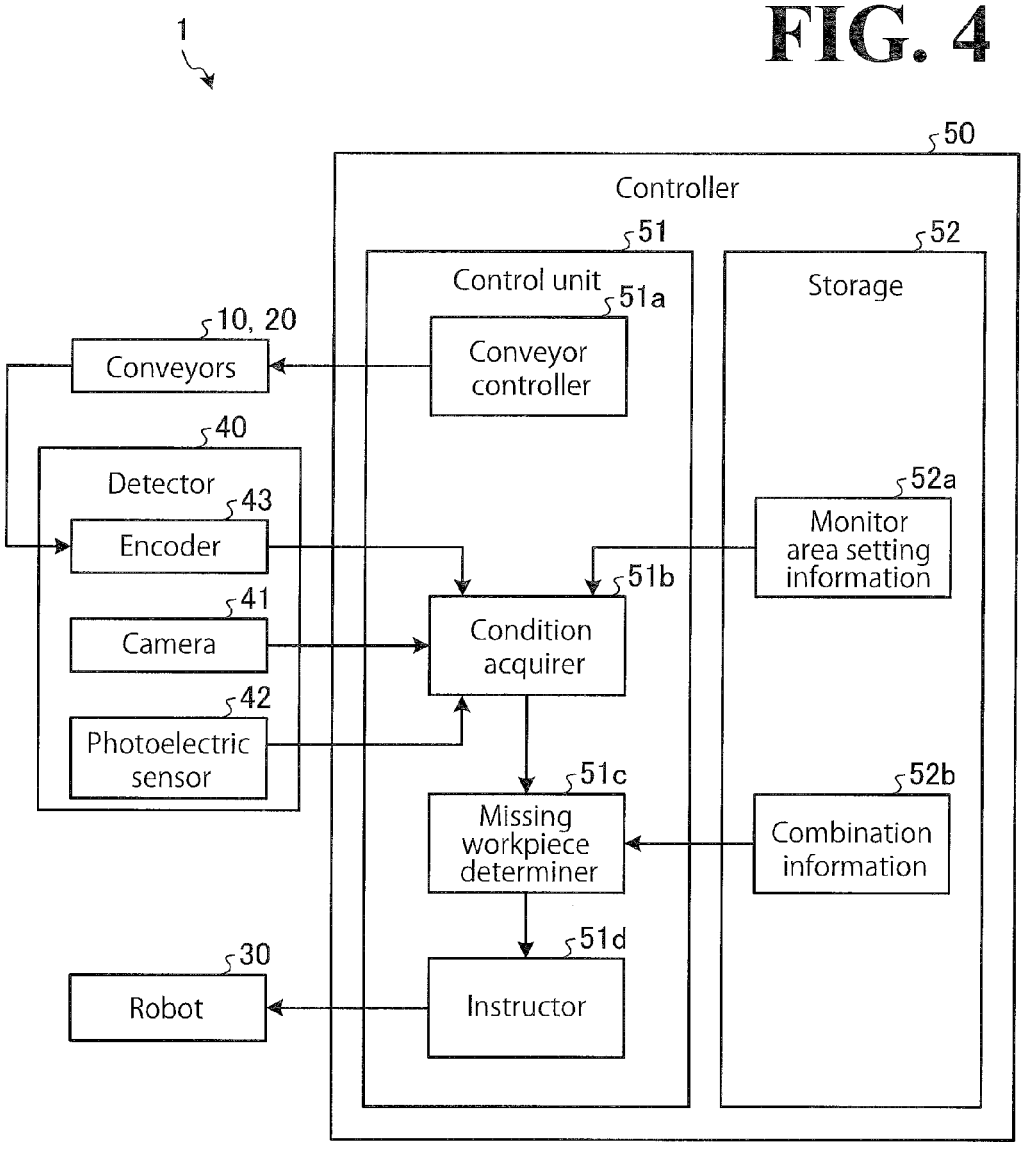
1
50
Controller
51
Control unit
51a
Conveyor controller
52
Storage
10, 20
Conveyors
40
Detector
43
Encoder
41
Camera
42
Photoelectric sensor
52a
Monitor area setting information
51b
Condition acquirer
51c
Missing workpiece determiner
52b
Combination information
51d
Instructor
30
Robot

FIG. 5

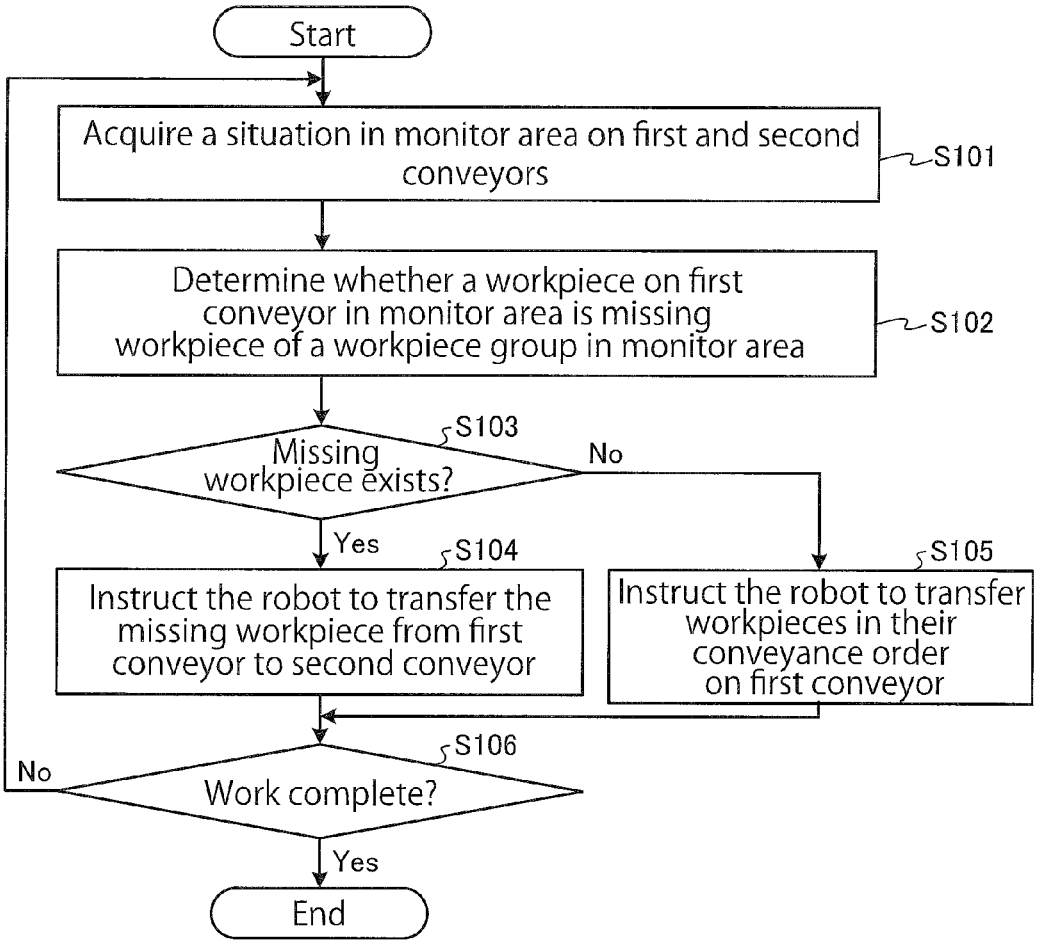
Start
Acquire a situation in monitor area on first and second conveyors
S101
Determine whether a workpiece on first conveyor in monitor area is missing workpiece of a workpiece group in monitor area
S102
S103
Missing workpiece exists?
No
Yes
S104
Instruct the robot to transfer the missing workpiece from first conveyor to second conveyor
S105
Instruct the robot to transfer workpieces in their conveyance order on first conveyor
S106
No
Work complete?
Yes
End

FIG. 6A

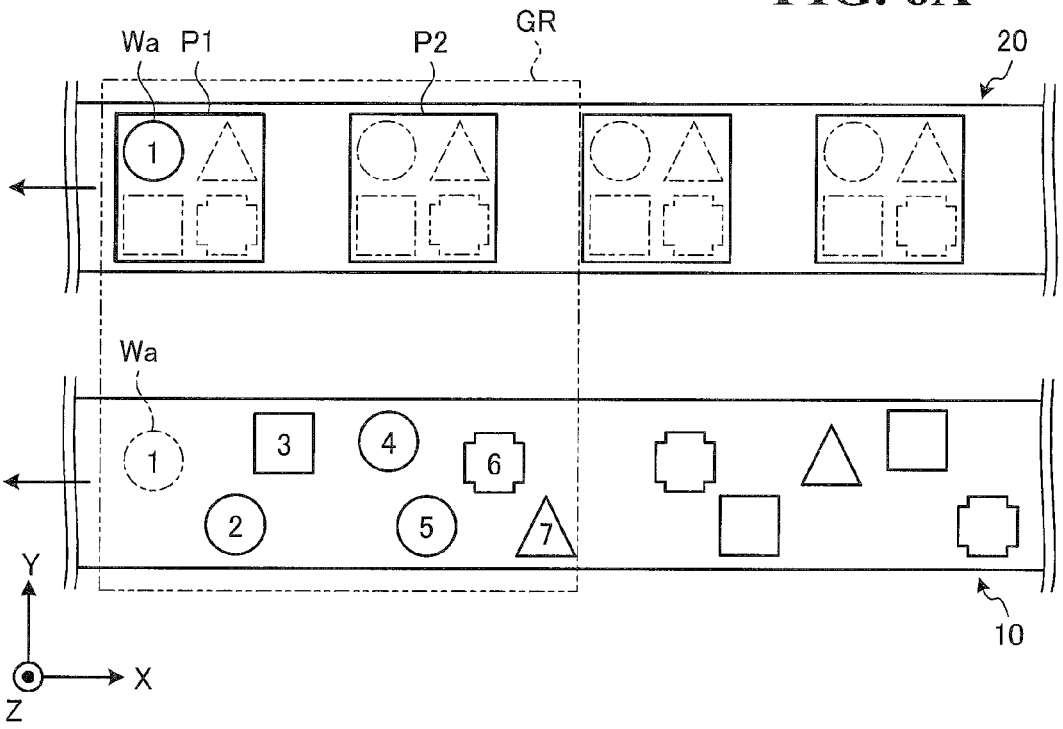
Wa
P1
P2
GR
20
Wa
1
3
4
6
2
5
7
Y
X
Z
10

FIG. 6B

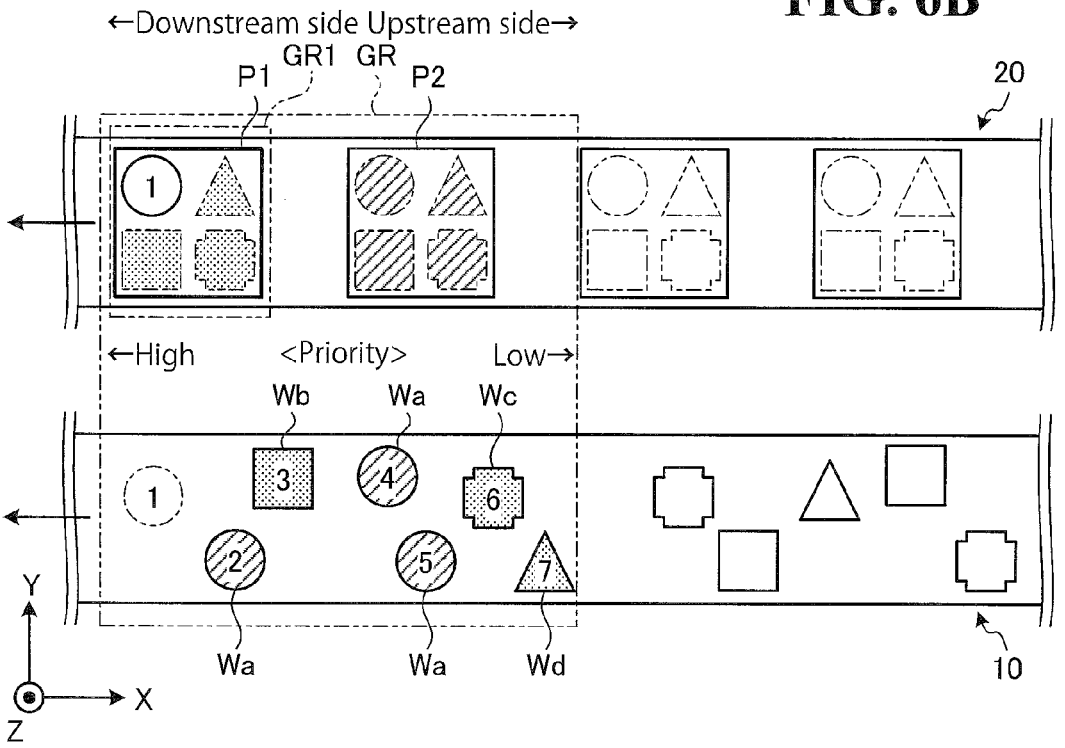
←Downstream side Upstream side→
P1
GR1
GR
P2
20
←High
<Priority>
Low→
Wb
Wa
Wc
1
3
4
6
2
5
7
Wa
Wa
Wd
Y
X
Z
10

FIG. 6C

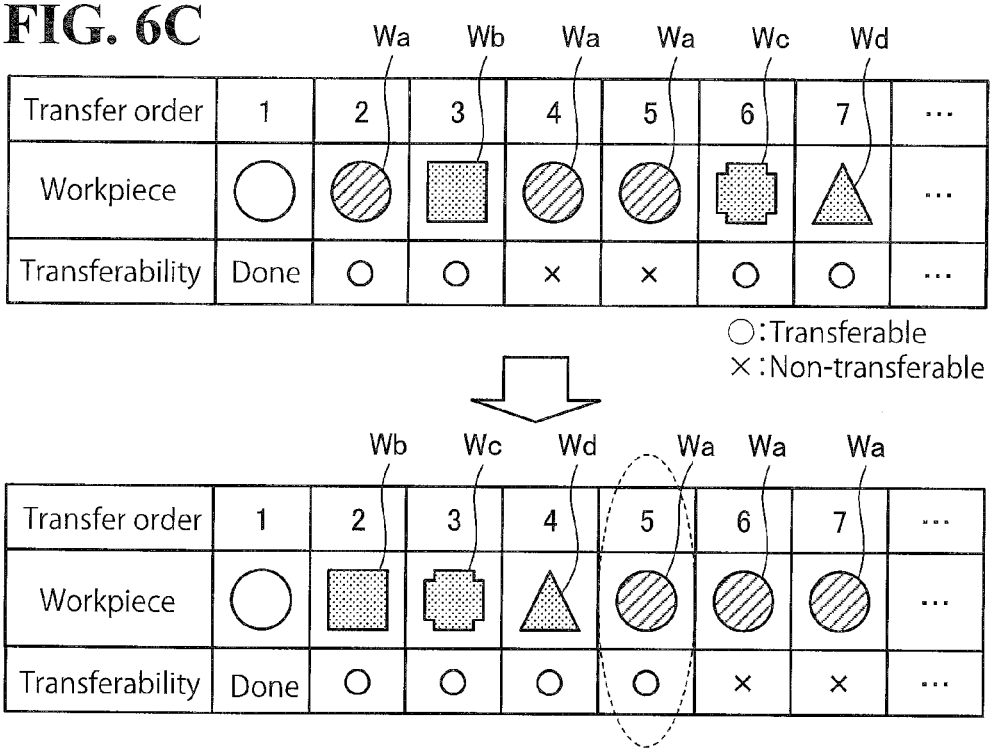
Wa Wb Wa Wa Wc Wd
Transfer order 1 2 3 4 5 6 7 ...
Workpiece
Transferability Done ○ ○ × × ○ ○ ...
○:Transferable
×:Non-transferable
Wb Wc Wd Wa Wa Wa
Transfer order 1 2 3 4 5 6 7 ...
Workpiece
Transferability Done ○ ○ ○ ○ × × ...

FIG. 6D

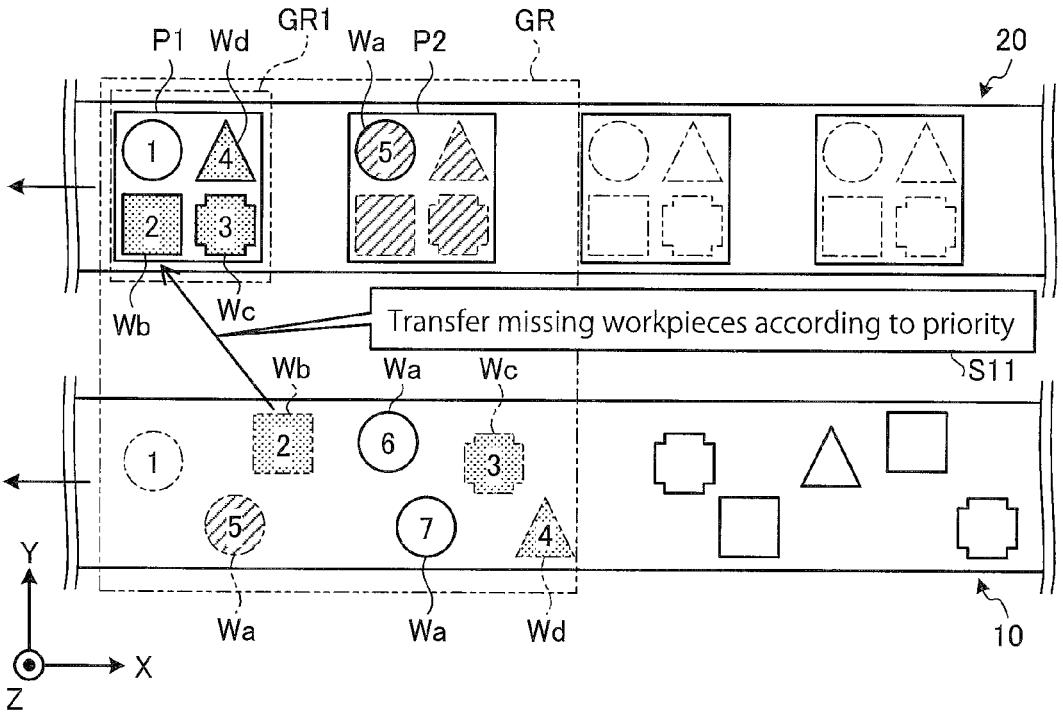
P1 Wd GR1 Wa P2 GR
20
1 4 5
2 3
Wb Wc
Transfer missing workpieces according to priority
S11
Wb Wa Wc
1 2 6 3
5 7 4
Wa Wa Wd
10
Y
X
Z

ROBOT SYSTEM, ROBOT APPARATUS, AND METHOD FOR PICKING WORKPIECE

CROSS-REFERENCE TO RELATED APPLICATIONS

The present application claims priority under 35 U.S.C. §119 to Japanese Patent Application No. 2014-190444, filed Sep. 18, 2014. The contents of this application are incorporated herein by reference in their entirety.

BACKGROUND

1. Field of the Invention

The embodiments disclosed herein relate a robot system, a robot apparatus, and a method for picking a workpiece.

2. Discussion of the Background

Japanese Unexamined Patent Application Publication No. 2002-316716 discloses an object processor for use in a robot system in which conveyors or similar devices convey workpieces and robots hold the workpieces to transfer the workpieces to another place.

The object processor includes first and second conveyors and first and second robots. The first and second conveyors convey objects in the same direction. The two robots transfer the objects from the first conveyor to the second conveyor.

Specifically, the first conveyor first conveys a random mixture of different kinds of workpieces. From among the different kinds of workpieces, the first robot holds a first kind of workpieces, one at a time in the order that the first kind of workpieces are conveyed; picks the first kind of workpieces from the first conveyor; and transfers the first kind of workpieces to the second conveyor.

At the downstream area of the first robot, the second robot holds a second kind of workpieces, from among the different kinds of workpieces, that are intended to be combined with the first kind of workpieces in the order that the second kind of workpieces are conveyed; picks the second kind of workpieces from the first conveyor; transfers the second kind of workpieces to the second conveyor; and combines the second kind of workpieces with the first kind of workpieces.

SUMMARY

According to one aspect of the present disclosure, a robot system includes a first conveyor, a second conveyor, a robot, and a controller. The first conveyor is configured to convey a plurality of kinds of workpieces. The second conveyor is configured to convey workpiece groups each including a combination of the plurality of kinds of workpieces. The controller is configured to control the robot, and includes a situation acquirer, a determiner, and an instructor. The situation acquirer is configured to acquire a situation in a predetermined monitor area on the first conveyor and the second conveyor. The predetermined monitor area is set based on a movable range of the robot. Based on the situation acquired by the situation acquirer, the determiner is configured to determine whether at least one workpiece among the plurality of kinds of workpieces on the first conveyor in the predetermined monitor area is a missing workpiece of at least one workpiece group among the workpiece groups in the predetermined monitor area. The instructor is configured to instruct the robot to hold the at least one workpiece determined as the missing workpiece by the determiner and to transfer the at least one workpiece from the first conveyor to the second conveyor.

According to another aspect of the present disclosure, a robot apparatus includes a robot and a controller. The controller is configured to control the robot, and includes a situation acquirer, a determiner, and an instructor. The situation acquirer is configured to acquire a situation in a predetermined monitor area on a first conveyor and a second conveyor. The predetermined monitor area is set in a movable range of the robot. Based on the situation acquired by the situation acquirer, the determiner is configured to determine whether at least one workpiece among the plurality of kinds of workpieces on the first conveyor in the predetermined monitor area is a missing workpiece of at least one workpiece group among the workpiece groups in the predetermined monitor area. The instructor is configured to instruct the robot to hold the at least one workpiece determined as the missing workpiece by the determiner and to transfer the at least one workpiece from the first conveyor to the second conveyor.

According to the other aspect of the present disclosure, a method is for picking a workpiece in a robot system. The robot system includes a first conveyor, a second conveyor, and a robot. The first conveyor is configured to convey a plurality of kinds of workpieces mixed together at random. The second conveyor is configured to convey workpiece groups each including a predetermined combination pattern of the plurality of kinds of workpieces. The method includes controlling the robot. The controlling step includes acquiring a situation in a predetermined monitor area on the first conveyor and the second conveyor. The predetermined monitor area is set based on a movable range of the robot. Based on the situation acquired by the situation acquirer, a determination is made as to whether at least one workpiece among the plurality of kinds of workpieces on the first conveyor in the predetermined monitor area is a missing workpiece of at least one workpiece group among the workpiece groups in the predetermined monitor area. Using the robot, the at least one workpiece determined as the missing workpiece by the determiner is held and transferred from the first conveyor to the second conveyor.

BRIEF DESCRIPTION OF THE DRAWINGS

A more complete appreciation of the present disclosure and many of the attendant advantages thereof will be readily obtained as the same becomes better understood by reference to the following detailed description when considered in connection with the accompanying drawings, wherein:

FIG. **1**A is a schematic plan view of a robot system according to a first embodiment, illustrating an arrangement configuration of the robot system;

FIG. **1**B is a schematic side view of a robot, illustrating a transfer movement of the robot;

FIG. **1**C is a schematic plan view of exemplary workpieces and an exemplary workpiece group;

FIG. **2** is a diagram illustrating a method according to a comparative example for picking a workpiece;

FIG. **3**A is a first diagram illustrating a method according to the first embodiment for picking a workpiece;

FIG. **3**B is a second diagram illustrating the method according to the first embodiment for picking a workpiece;

FIG. **3**C is a third diagram illustrating the method according to the first embodiment for picking a workpiece;

FIG. **4** is a block diagram illustrating the robot system according to the first embodiment;

FIG. **5** is a flowchart of a procedure for processing performed by the robot system according to the first embodiment;

FIG. **6**A is a first diagram illustrating a method according to a second embodiment for picking a workpiece;

FIG. **6**B is a second diagram illustrating the method according to the second embodiment for picking a workpiece;

FIG. **6**C is a third diagram illustrating the method according to the second embodiment for picking a workpiece; and

FIG. **6**D is a fourth diagram illustrating the method according to the second embodiment for picking a workpiece.

DESCRIPTION OF THE EMBODIMENTS

A robot system, a robot apparatus, and a method for picking a workpiece according to embodiments of the present disclosure will be described in detail below with reference to the accompanying drawings. The following embodiments are provided for exemplary purposes only and are not intended to limit the present disclosure.

In the following description, the action of holding a workpiece conveyed on a conveyor and taking the workpiece from the conveyor will be referred to as "picking".

First Embodiment

An outline of a robot system **1** according to a first embodiment will be first described with reference to FIG. **1**A to FIG. **1**C. FIG. **1**A is a schematic plan view of a robot system **1** according to the first embodiment, illustrating an arrangement configuration of the robot system **1**. FIG. **1**B is a schematic side view of a robot **30**, illustrating a transfer movement of the robot **30**. FIG. **1**C is a schematic plan view of exemplary workpieces W and an exemplary workpiece group WG.

For the ease of description, FIG. **1**A illustrates a three-dimensional orthogonal coordinate system including a Z axis with its vertically upward direction being assumed the positive direction. This orthogonal coordinate system may also be illustrated in some other drawings referred to in the following description.

As illustrated in FIG. **1**A, the robot system **1** according to the first embodiment includes a first conveyor **10** (corresponding to the first conveyor), a second conveyor **20** (corresponding to the second conveyor), the robot **30**, a detector **40**, and a controller **50**.

The first conveyor **10** is a conveyance device that conveys, from the upstream side toward the downstream side, a plurality of kinds of workpieces W mixed together at random. The second conveyor **20** is a conveyance device that conveys workpiece groups WG from the upstream side toward the downstream side. Each of the workpiece groups WG is a combination of the plurality of kinds of workpieces W.

In the first embodiment, the first conveyor **10** and the second conveyor **20** are belt conveyors. This configuration, however, should not be construed in a limiting sense. The first conveyor **10** and the second conveyor **20** may be any other conveyance devices insofar as the conveyance devices are capable of conveying the workpieces W and the workpiece groups WG in a predetermined conveyance direction. In the first embodiment, the conveyance direction is the negative direction of the X axis.

The first conveyor **10** and the second conveyor **20** are arranged to pass through the movable range of the robot **30**. A monitor area GR is set based on the movable range of the robot **30** on the conveyance paths of the first conveyor **10** and the second conveyor **20**.

The robot **30** is an articulated robot secured on an installation object such as a ceiling, a wall, and a floor. In the first embodiment, the robot **30** is a parallel link robot with its base secured on a ceiling.

As illustrated in FIG. **1**B, the robot **30** picks a plurality of kinds of workpieces W, one at a time, conveyed on the first conveyor **10** (see the arrow **101** in FIG. **1**B), and transfers the workpieces W to the second conveyor **20** successively (see the arrow **102** in FIG. **1**B). Then, the robot **30** successively places the workpieces W on, for example, pallets P conveyed on the second conveyor **20** (see the arrow **103** in FIG. **1**B). Thus, the robot **30** combines the plurality of kinds of workpieces W and generates workpiece groups WG.

The robot **30** includes an arm **31**. At the distal end of the arm **31**, a holder **32** is attached so as to hold a workpiece W. The holder **32** holds the workpiece W by sucking the workpiece W using a suction device such as a vacuum pump. The holder **32** moves the workpiece W to above the pallet P, and releases the suction force of the suction device. Thus, the robot **30** transfers the workpiece W from the first conveyor **10** to the second conveyor **20**. The robot **30** is allowed to transfer the workpieces Win the monitor area GR.

In the first embodiment, the robot **30** includes the single holder **32**. This configuration, however, should not be construed in a limiting sense. The robot **30** may include two or more holders **32**.

The holder **32** may hold the workpiece W by other than suction. For example, the holder **32** may clamp an end portion of the workpiece W.

In the first embodiment, the robot **30** is a parallel link robot. This configuration, however, should not be construed in a limiting sense. Insofar as the robot **30** is capable of holding and transferring the workpiece W, the robot **30** may be a vertical articulated robot, a horizontal articulated robot, an orthogonal robot, or any other robot.

The detector **40** is disposed at a further upstream position than the robot **30**, and detects situations that the first conveyor **10** and the second conveyor **20** are in. As illustrated in FIG. **1**A, the detector **40** includes, for example, a camera **41**, photoelectric sensors **42**, and encoders **43** (each corresponding to the measurer).

The camera **41** picks up an image of predetermined imaging areas on the conveyance paths of the first conveyor **10** and the second conveyor **20** so as to detect conveyance situations of the workpieces W and the workpiece groups WG. Two photoelectric sensors **42** are dedicated to each of the first conveyor **10** and the second conveyor **20**. The photoelectric sensors **42** emit and receive light to sense changes in the amount of received light, so as to detect conveyance situations of the workpieces W and the workpiece groups WG.

One encoder **43** is dedicated to each of the first conveyor **10** and the second conveyor **20**, and detects rotation situations of the first conveyor **10** and the second conveyor **20**. Results of the detections performed by the camera **41**, the photoelectric sensors **42**, and the encoders **43** are output to the controller **50** through a communication network (not illustrated) such as Local Area Network (LAN).

The controller **50** is coupled in a communicable manner to various elements such as the first conveyor **10**, the second conveyor **20**, the robot **30**, and the detector **40**. It is noted that any form of connection, wired or wireless, may be employed. The controller **50** includes various control units, processors, and storages so as to control operations of the various elements coupled to the controller **50**.

For example, based on a job program acquired through an input device (such as a programming pendant), not illustrated, or through a higher device, the controller **50** generates a movement signal to cause the robot **30** to operate. Then, the controller **50** outputs the movement signal to the robot **30** to control the movement of the robot **30**.

The movement signal is generated in the form of, for example, a pulse signal to each servomotor in each joint of the robot **30**. A specific configuration of the controller **50** will be described later with reference to FIG. **4**.

With the above-described configuration of the robot system **1** according to the first embodiment, the detector **40** detects situations that the first conveyor **10** and the second conveyor **20** are in. Based on the situations detected by the detector **40**, the controller **50** acquires a situation in the monitor area GR.

Based on the situation in the monitor area GR, the controller **50** instructs the robot **30** to pick a workpiece W using the holder **32** and transfer the workpiece W from the first conveyor **10** to the second conveyor **20**. In response to the instruction from the controller **50**, the robot **30** performs the transfer movement.

In the transfer movement of the workpiece W, the robot system **1** according to the first embodiment selects a manner of picking that the robot system **1** determines as effective considering the situation in the monitor area GR, so as to eliminate or minimize a missed transfer to the second conveyor **20**. Thus, the robot system **1** performs a more highly efficient transfer movement. This configuration will be described in more detail below with reference to FIG. **2** and later drawings.

Prior to the description with reference to FIG. **2** and later drawings, exemplary workpieces W and exemplary workpiece groups WG will be described. In the following description, as illustrated in FIG. **1**C, a workpiece group WG is generated by combining four kinds of workpieces Wa, Wb, We, and Wd on a pallet P.

In the drawings referred to in the following description, as represented by FIG. **1**C, the workpieces Wa, Wb, We, and Wd are occasionally denoted with reference numerals. The reference numerals indicate the "transfer order". Also, in a context in which the kinds of the workpieces are irrelevant, the workpieces Wa, Wb, We, and Wd will be collectively referred to as "workpieces W".

Reference numeral "**100**" in FIG. **1**A will be described later in the description of other embodiments.

Next, by referring to FIG. **2** to FIG. **3**C, a method according to the first embodiment for picking a workpiece will be described in comparison with a comparative method for picking a workpiece. FIG. **2** is a diagram illustrating the comparative method for picking a workpiece.

FIGS. **3**A to **3**C are first to third diagrams illustrating the method according to the first embodiment for picking a workpiece. In the comparative method illustrated in FIG. **2**, the elements used are identical to the elements used in the method according to the first embodiment, and like reference numerals designate corresponding or identical elements throughout FIGS. **2** to **3**C for convenience of description.

In FIGS. **2** to **3**C, the workpieces W indicated by phantom lines are imaginary workpieces W, and the workpieces W indicated by solid lines are real workpieces W. That is, the workpieces W indicated by phantom lines on the first conveyor **10** are workpieces W that have already been transferred to the second conveyor **20**, while the workpieces W indicated by solid lines on the first conveyor **10** are workpieces W yet to be transferred to the second conveyor **20**.

As illustrated in FIG. **2**, in the comparative method for picking a workpiece, workpieces W are picked in the order that the workpieces are conveyed on the first conveyor **10** and successively transferred to the second conveyor **20**. In the situation illustrated in FIG. **2**, the workpieces W numbered "**1**" to "**4**" in the transfer order are successively transferred to pallets P**1** to P**3** on the second conveyor **20**. The workpiece W numbered "**5**" in the transfer order, however, has nowhere to be transferred on the second conveyor **20** until a pallet P**4** enters a movable range WR of the robot **30**. This configuration causes the robot **30** to wait (step S'**1**) for the pallet P**4** to enter the movable range WR.

While the robot **30** is waiting, the workpieces W numbered "**6**" and "**7**" in the transfer order are unable to be transferred, even though the "**6**" and "**7**" workpieces W are within the movable range WR (step S'**2**). Thus, there is a possibility of the pallet P**1** lacking in combination with the "**6**" and "**7**" workpieces W (step S'**3**).

In view of the possible lack of combination, the method according to the first embodiment for picking a workpiece includes acquiring a situation in the monitor area GR; and based on the acquired situation, making a determination as to whether any of the workpieces W on the first conveyor **10** in the monitor area GR are missing workpieces of any of the workpiece groups WG in the monitor area GR. In other words, the first embodiment takes into consideration situations in which the workpiece groups WG are generated on the second conveyor **20**, which are not taken into consideration in the comparative method.

In the method according to the first embodiment for picking a workpiece, when there are missing workpieces W on the first conveyor **10**, at least one of the missing workpieces W is picked and transferred from the first conveyor **10** to the second conveyor **20**. That is, in the method according to the first embodiment for picking a workpiece, there are exceptions to the usual order of conveyance that the workpieces W are transferred in order that the workpieces W are conveyed on the first conveyor **10**.

Specifically, as illustrated in FIG. **3**A, an exemplary step of the method according to the first embodiment for picking a workpiece is to, prior to every one of the workpieces W being picked, acquire a situation in the monitor area GR based on the results of the detections performed by the detector **40** (step S**1**).

Then, based on the acquired situation in the monitor area GR, a determination is made as to whether any of the workpieces W on the first conveyor **10** in the monitor area GR are a missing workpiece of any of the workpiece groups WG in the monitor area GR (step S**2**).

In the situation in the monitor area GR illustrated in FIG. **3**A, the method according to the first embodiment for picking a workpiece determines that a workpiece We, which is numbered "**6**" in the transfer order, and a workpiece Wd, which is numbered "**7**" in the transfer order, on the first conveyor **10** are missing workpieces in a pallet P**1** and a pallet P**2** on the second conveyor **20**. In FIGS. **3**A to **3**C, the missing workpieces W on the first conveyor **10** and the second conveyor **20** are shaded by slanting lines.

As illustrated in FIG. **3**B, the "**6**" workpiece We and the "**7**" workpiece Wd in the transfer order on the first conveyor **10**, which have been determined as missing workpieces W, are respectively advanced to "**4**" and "**5**" in the transfer order. It is noted that since the workpiece Wc is at a further downstream position than the workpiece Wd on the first conveyor **10**, the workpiece We is prioritized over the workpiece Wd.

As illustrated in FIG. **3**C, according to the changed transfer order, the workpieces Wc and Wd, which have been determined as missing workpieces W, are prioritized in the transfer to the second conveyor **20** (step S**3**).

It is noted that the workpieces We and Wd are missing workpieces W both in the pallet P**1** and the pallet P**2**, and that in the first embodiment, priority is given to the pallet P**1**, which is at a further downstream position than the pallet P**2**, to accept the workpieces Wc and Wd. In another embodiment

where the conveyance situations of the first conveyor **10** and the second conveyor **20** lead to a determination that no lack of combination is expected to occur in the pallet P**1** nor the pallet P**2**, the workpieces We and Wd may be transferred to the pallet P**2**.

Thus, in comparison with the comparative method, the method according to the first embodiment for picking a workpiece eliminates or minimizes lack of combination of the workpieces W, that is, ensures reliable transfer of the workpieces W. The method according to the first embodiment also eliminates the need for decelerating or stopping the first conveyor **10** and the second conveyor **20**, and thus improves conveyance efficiency. That is, the workpieces W are transferred more efficiently by the method according to the first embodiment.

Next, by referring to FIG. **4**, a block configuration of the robot system **1** according to the first embodiment will be described. FIG. **4** is a block diagram illustrating the robot system **1** according to the first embodiment. It is noted that FIG. **4** only illustrates those components necessary for description of the robot system **1**, omitting those components of general nature.

The following description by referring to FIG. **4** will mainly focus on the internal configuration of the controller **50**, and may occasionally simplify or omit the components that have been already described by referring to the drawings such as FIG. **1**A.

As illustrated in FIG. **4**, the controller **50** includes a control unit **51** and a storage **52**. The control unit **51** further includes a conveyor controller **51***a*, a situation acquirer **51***b*, a missing workpiece determiner **51***c* (corresponding to the determiner), and an instructor **51***d*.

The storage **52** is a storage device such as a hard disk drive and a non-volatile memory, and stores monitor area setting information **52***a* and combination information **52***b*.

It is noted that not all the elements of the controller **50** illustrated in FIG. **4** need to be arranged within the single controller **50**. Another possible example is that at least one of the monitor area setting information **52***a* and the combination information **52***b* stored in the storage **52** is stored in an inner memory of the robot **30**. Still another possible example is that at least one of the monitor area setting information **52***a* and the combination information **52***b* is stored in an upper-level device upper than the controller **50** and acquired as necessary from the upper-level device by the controller **50**.

A non-limiting example of the control unit **51** is a Central Processing Unit (CPU) that is in charge of overall control of the controller **50**. The conveyor controller **51***a* controls the first conveyor **10** and the second conveyor **20** to convey workpieces W and workpiece groups WG (occasionally, pallets P without workpieces W in the pallets P) to the monitor area GR of the robot **30**. The first conveyor **10** and the second conveyor **20** will be collectively referred to as conveyors **10** and **20** in FIG. **4**.

Based on the monitor area setting information **52***a*, the situation acquirer **51***b* sets an imaginary monitor area GR on the first conveyor **10** and the second conveyor **20**. The situation acquirer **51***b* acquires a situation in the monitor area GR as the situation acquirer **51***b* finds it necessary considering the results of the detections performed by the detector **40**.

The monitor area setting information **52***a* is information required for setting the monitor area GR, and includes information such as the positions and dimensions of the movable range WR of the robot **30**, the widths of the first conveyor **10** and the second conveyor **20**, and the distance of the camera **41** from an imaging area.

Specifically, the situation acquirer **51***b* acquires situations of the workpieces W and the workpiece groups WG in the monitor area GR based on an image received from the camera **41**, based on sensing data received from the photoelectric sensors **42**, and based on rotation situations of the conveyors **10** and **20** received from the encoders **43**. The situation acquirer **51***b* notifies the missing workpiece determiner **51***c* of the acquired situations.

Based on the acquired situations notified from the situation acquirer **51***b*, the missing workpiece determiner **51***c* determines whether any of the workpieces W on the first conveyor **10** in the monitor area GR are missing workpieces of any of the workpiece groups WG in the monitor area GR.

In this determination, the missing workpiece determiner **51***c* also refers to the combination information **52***b*. The combination information **52***b* includes combinations of a plurality of kinds of workpieces W that constitute the workpiece groups WG. The missing workpiece determiner **51***c* notifies the instructor **51***d* of the determination.

Based on the determination notified from the missing workpiece determiner **51***c*, the instructor **51***d* instructs the robot **30** to pick at least one of the workpieces W determined as missing workpieces, and to transfer the one workpiece W from the first conveyor **10** to the second conveyor **20**.

Specifically, when there is a workpiece W determined as a missing workpiece W by the missing workpiece determiner **51***c*, the instructor **51***d* instructs the robot **30** to hold and transfer the workpiece W by the method according to the first embodiment for picking a workpiece (see FIGS. **3**B and **3**C).

Next, by referring to FIG. **5**, a procedure for processing performed by the robot system **1** according to the first embodiment will be described. FIG. **5** is a flowchart of the procedure for the processing performed by the robot system **1** according to the first embodiment.

As illustrated in FIG. **5**, the situation acquirer **51***b* acquires a situation in a predetermined monitor area GR on the first conveyor **10** and the second conveyor **20** (step S**101**). For example, the situation acquirer **51***b* acquires a situation in the monitor area GR prior to every operation of picking each workpiece W from the first conveyor **10**.

Next, based on the situation notified from the situation acquirer **51***b*, the missing workpiece determiner **51***c* determines whether any of the workpieces W in the monitor area GR on the first conveyor **10** are missing workpieces of any of the workpiece groups WG in the monitor area GR (step S**102**).

When the determination indicates that there are missing workpieces W ("Yes" at step S**103**), the instructor **51***d* instructs the robot **30** to transfer at least one of the missing workpieces W from the first conveyor **10** to the second conveyor **20** (step S**104**).

When the determination indicates that there are no missing workpieces W ("No" at step S**103**), the instructor **51***d* instructs the robot **30** to transfer the workpieces W on the first conveyor **10** in the order that the workpieces W are conveyed on the first conveyor **10** (step S**105**).

Then, a determination is made as to whether the work is complete (step S**106**). When the work is complete ("Yes" at step S**106**), the processing ends. When the work is not complete ("No" at step S**106**), the controller **50** repeats the processing that starts from step S**101**.

As has been described hereinbefore, the robot system according to the first embodiment includes the first conveyor (corresponding to the first conveyor), the second conveyor (corresponding to the second conveyor), the robot, and the controller. The first conveyor conveys a plurality of kinds of workpieces. The second conveyor conveys workpiece groups

each including a combination of the plurality of kinds of workpieces. The robot makes a predetermined movement. The controller controls the movement of the robot.

The controller includes the situation acquirer, the missing workpiece determiner (corresponding to the determiner), and the instructor. The situation acquirer acquires a situation in the predetermined monitor area on the first conveyor and the second conveyor. The predetermined monitor area is set based on the movable range of the robot. Based on the situation acquired by the situation acquirer, the missing workpiece determiner determines whether any of the workpieces on the first conveyor in the monitor area are missing workpieces of any of the workpiece groups in the monitor area.

The instructor instructs the robot to hold at least one of the workpieces determined as missing workpieces W by the determiner and to transfer the one workpiece from the first conveyor to the second conveyor.

With this configuration, the robot system according to the first embodiment ensures more efficient transfer of the workpieces.

In the first embodiment, when any of the workpieces on the first conveyor in the monitor area are missing workpieces of at least one of the workpiece groups on the second conveyor, any of the missing workpieces are picked and transferred to the second conveyor. This configuration, however, should not be construed in a limiting sense.

Another possible embodiment is to prioritize a missing workpiece of a workpiece group in a most downstream area of the second conveyor. This configuration will be described below with reference to a second embodiment illustrated in FIGS. **6**A to **6**D.

Second Embodiment

FIGS. **6**A to **6**D are respectively first to fourth diagrams illustrating a method according to the second embodiment for picking a workpiece. For convenience of description, like reference numerals designate corresponding or identical elements throughout the first and second embodiments. Also for convenience of description, the robot system according to the second embodiment is denoted with reference numeral "**1**'", not illustrated.

The following description will be provided under the assumption that the situation illustrated in FIG. **6**A is the situation in the monitor area GR acquired after a workpiece Wa numbered "**1**" in the transfer order has been transferred from the first conveyor **10** to a pallet P**1** on the second conveyor **20**.

The method according to the second embodiment for picking a workpiece is different from the first embodiment in that a missing workpiece W of a workpiece group WG in a most downstream area of the second conveyor **20** is prioritized.

Specifically, as illustrated in FIG. **6**B, the method according to the second embodiment for picking a workpiece gives higher priority to workpieces W in a downstream area of the monitor area GR, and gives lower priority to workpieces W in an upstream area of the monitor area GR. In the most downstream area of the second conveyor **20** in the monitor area GR, a monitor area GR**1** is set. The monitor area GR**1** is given highest priority.

Next, similarly to the first embodiment, a determination is made as to whether any of the workpieces W on the first conveyor **10** in the monitor area GR are missing workpieces of any of the workpiece groups WG in the monitor area GR. In the method according to the second embodiment for picking a workpiece, the determination is made separately for the monitor area GR**1** and for the rest of the monitor area GR.

Assume that the determination is made in the situation illustrated in FIG. **6**A. Under this assumption, as illustrated in FIG. **6**B, the determination made for the monitor area GR**1** is that a workpiece Wb, which is numbered "**3**" in the transfer order, a workpiece Wc, which is numbered "**6**" in the transfer order, and a workpiece Wd, which is numbered "**7**" in the transfer order, are missing workpieces in a pallet P**1** in the monitor area GR**1**. In FIG. **6**B to FIG. **6**D, the missing workpieces W are shaded by fine dots.

The determination made for the rest of the monitor area GR is that workpieces Wa, which are "**2**", "**4**", and "**5**" in the transfer order, are missing workpieces in a pallet P**2**. In FIG. **6**B to FIG. **6**D, the missing workpieces W are shaded by slanting lines.

As illustrated in FIG. **6**C, the workpiece Wb, the workpiece We, and the workpiece Wd, which are respectively numbered "**3**", "**6**", and "**7**" in the transfer order and which have been prioritized as missing workpieces W in the monitor area GR**1**, are respectively advanced to "**2**", "**3**", and "**4**" in the transfer order.

The workpieces Wa, which are numbered "**2**", "**4**", and "**5**" in the transfer order and which have been determined as missing workpieces W in the rest of the monitor area GR, are respectively increased to "**5**", "**6**", and "**7**" in the transfer order. The workpiece Wa circled by a dashed line in FIG. **6**C has originally been transferrable with highest priority and is now lowered in priority. This configuration may not necessarily be applicable when the conveyance situation of the first conveyor **10** leads to such a determination that there is a possibility of the workpiece Wa lacking in combination on the second conveyer **20**.

As illustrated in FIG. **6**D, the prioritized missing workpieces W are transferred to the second conveyor **20** in the transfer order thus changed (step S**11**).

Thus, the method according to the second embodiment for picking a workpiece eliminates or minimizes lack of combination of the workpieces W, that is, ensures reliable transfer of the workpieces W. That is, the workpieces W are transferred more efficiently by the method according to the second embodiment.

As has been described hereinbefore, the method according to the second embodiment for picking a workpiece prioritizes a missing workpiece W of a workpiece group WG in the most downstream area of the second conveyor **20**.

That is, in the robot system **1**' according to the second embodiment, the instructor **51***d* instructs the robot **30** to prioritize one workpiece W that is among the workpieces W determined as missing workpieces W by the missing workpiece determiner **51***c* and that is in the most downstream area of the second conveyor **20** in the monitor area GR. The robot **30** holds and transfers the prioritized one workpiece W. This configuration ensures more efficient transfer of the workpieces W.

Other Embodiments

The first and second embodiments are implemented using the following robot apparatus.

A robot apparatus **100** (see FIGS. **1**A and **4**) includes the robot **30** and the controller **50**. The controller **50** controls the movement of the robot **30**, and includes the situation acquirer **51***b*, the missing workpiece determiner **51***c*, and the instructor **51***d*. The situation acquirer **51***b* acquires a situation in a predetermined monitor area GR on the first and second conveyers **10** and **20**. The predetermined monitor area GR is set based on the movable range of the robot **30**. Based on the situation acquired by the situation acquirer **51***b*, the missing

workpiece determiner **51***c* determines whether any of the workpieces W on the first conveyor **10** in the monitor area GR are missing workpieces of any of the workpiece groups WG in the monitor area GR. The instructor **51***d* instructs the robot **30** to hold at least one of the workpieces W determined as the missing workpieces W by the missing workpiece determiner **51***c*, and to transfer the at least one workpiece W from the first conveyor **10** to the second conveyor **20**.

In the above-described embodiments, the transfer order in which the robot picks the workpieces is changed to eliminate or minimize lack of combination of the workpieces, in an attempt to transfer the workpieces more efficiently. This configuration, however, should not be construed in a limiting sense. Another possible embodiment is to add control to change the conveyance speeds of the conveyors.

Specifically, in accordance with the detector **40**'s detection of the rotation situation of the conveyors **10** and **20** and the conveyance situation of the workpieces W, the instructor **51***d* calculates appropriate control values for the conveyors **10** and **20** to eliminate or minimize lack of combination and missed picking, and instructs the conveyor controller **51***a* with the control values (see FIG. **4**). It will be readily appreciated that the above-described embodiments are implementable without the control to change the conveyance speeds of the conveyors.

Obviously, numerous modifications and variations of the present disclosure are possible in light of the above teachings. It is therefore to be understood that within the scope of the appended claims, the present disclosure may be practiced otherwise than as specifically described herein.

What is claimed as new and desired to be secured by Letters Patent of the United States is:

1. A robot system comprising:
- a first conveyor configured to convey a plurality of kinds of workpieces;
- a second conveyor configured to convey workpiece groups each comprising a combination of the plurality of kinds of workpieces;
- a robot; and
- a controller configured to control the robot, the controller comprising:
  - a situation acquirer configured to acquire a situation in a predetermined monitor area on the first conveyor and the second conveyor, the predetermined monitor area being set based on a movable range of the robot;
  - a determiner configured to, based on the situation acquired by the situation acquirer, determine whether at least one workpiece among the plurality of kinds of workpieces on the first conveyor in the predetermined monitor area is a missing workpiece of at least one workpiece group among the workpiece groups in the predetermined monitor area; and
  - an instructor configured to instruct the robot to hold the at least one workpiece determined as the missing workpiece by the determiner and to transfer the at least one workpiece from the first conveyor to the second conveyor.

2. The robot system according to claim **1**,
- wherein the at least one workpiece determined as the missing workpiece by the determiner comprises a plurality of missing workpieces, and
- wherein the instructor is configured to instruct the robot to hold one missing workpiece, among the plurality of missing workpieces, that is positioned in a downstream area of the first conveyor in the predetermined monitor area, and to transfer the one missing workpiece from the first conveyor to the second conveyor.

3. The robot system according to claim **1**,
- wherein the at least one workpiece determined as the missing workpiece by the determiner comprises a plurality of missing workpieces,
- wherein the at least one workpiece group among the workpiece groups in the predetermined monitor area is positioned in a most downstream area of the second conveyor in the predetermined monitor area, and
- wherein the instructor is configured to instruct the robot to prioritize one missing workpiece, among the plurality of missing workpieces, that is the missing workpiece of the at least one workpiece group so as to hold the one missing workpiece and transfer the one missing workpiece from the first conveyor to the second conveyor.

4. The robot system according to claim **1**, further comprising a detector configured to detect a conveyance situation of the first conveyor and the second conveyor,
- wherein the situation acquirer is configured to acquire the situation in the predetermined monitor area based on the conveyance situation detected by the detector.

5. The robot system according to claim **4**, wherein the detector comprises a photoelectric sensor.

6. The robot system according to claim **4**, wherein the detector comprises a camera configured to pick up an image of the first conveyor and the second conveyor.

7. The robot system according to claim **4**, wherein the detector comprises
- a first measurer configured to measure rotation of the first conveyor, and
- a second measurer configured to measure rotation of the second conveyor.

8. The robot system according to claim **1**, wherein the robot comprises a parallel link robot.

9. A robot apparatus comprising:
- a robot; and
- a controller configured to control the robot, the controller comprising:
  - a situation acquirer configured to acquire a situation in a predetermined monitor area on a first conveyor and a second conveyor, the predetermined monitor area being set in a movable range of the robot;
  - a determiner configured to, based on the situation acquired by the situation acquirer, determine whether at least one workpiece among the plurality of kinds of workpieces on the first conveyor in the predetermined monitor area is a missing workpiece of at least one workpiece group among the workpiece groups in the predetermined monitor area; and
  - an instructor configured to instruct the robot to hold the at least one workpiece determined as the missing workpiece by the determiner and to transfer the at least one workpiece from the first conveyor to the second conveyor.

10. A method for picking a workpiece in a robot system, the robot system comprising:
- a first conveyor configured to convey a plurality of kinds of workpieces mixed together at random,
- a second conveyor configured to convey workpiece groups each comprising a predetermined combination pattern of the plurality of kinds of workpieces; and
- a robot,
- the method comprising controlling the robot, the controlling step comprising:
- acquiring a situation in a predetermined monitor area on the first conveyor and the second conveyor, the predetermined monitor area being set based on a movable range of the robot;

based on the situation acquired by the situation acquirer, determining whether at least one workpiece among the plurality of kinds of workpieces on the first conveyor in the predetermined monitor area is a missing workpiece of at least one workpiece group among the workpiece groups in the predetermined monitor area; and

holding, using the robot, the at least one workpiece determined as the missing workpiece by the determiner and transferring, using the robot, the at least one workpiece from the first conveyor to the second conveyor.

11. The robot system according to claim **2**,

wherein the at least one workpiece determined as the missing workpiece by the determiner comprises a plurality of missing workpieces,

wherein the at least one workpiece group among the workpiece groups in the predetermined monitor area is positioned in a most downstream area of the second conveyor in the predetermined monitor area, and

wherein the instructor is configured to instruct the robot to prioritize one missing workpiece, among the plurality of missing workpieces, that is the missing workpiece of the at least one workpiece group so as to hold the one missing workpiece and transfer the one missing workpiece from the first conveyor to the second conveyor.

12. The robot system according to claim **2**, further comprising a detector configured to detect a conveyance situation of the first conveyor and the second conveyor,

wherein the situation acquirer is configured to acquire the situation in the predetermined monitor area based on the conveyance situation detected by the detector.

13. The robot system according to claim **3**, further comprising a detector configured to detect a conveyance situation of the first conveyor and the second conveyor,

wherein the situation acquirer is configured to acquire the situation in the predetermined monitor area based on the conveyance situation detected by the detector.

14. The robot system according to claim **11**, further comprising a detector configured to detect a conveyance situation of the first conveyor and the second conveyor,

wherein the situation acquirer is configured to acquire the situation in the predetermined monitor area based on the conveyance situation detected by the detector.

15. The robot system according to claim **12**, wherein the detector comprises a photoelectric sensor.

16. The robot system according to claim **13**, wherein the detector comprises a photoelectric sensor.

17. The robot system according to claim **14**, wherein the detector comprises a photoelectric sensor.

18. The robot system according to claim **5**, wherein the detector comprises a camera configured to pick up an image of the first conveyor and the second conveyor.

19. The robot system according to claim **12**, wherein the detector comprises a camera configured to pick up an image of the first conveyor and the second conveyor.

20. The robot system according to claim **13**, wherein the detector comprises a camera configured to pick up an image of the first conveyor and the second conveyor.

* * * * *